R-Mode Baltic

Project status and results: May 2019

Stefan Gewies, German Aerospace Center (DLR)
EUSBSR PA Safe 20th Steering Committee Meeting

8 May 2019

R-Mode Baltic project goal

The main goal of the project R-Mode Baltic is the development and demonstration of a new maritime backup system for position, navigation and time (PNT) purposes.

- R(anging)-Mode is a terrestrial positioning system that
  - transmits timely synchronised ranging signals
  - using the communication channel of existing maritime radio infrastructure

- Project utilises signals of maritime radio beacons and AIS base stations

Project progress & Timeline

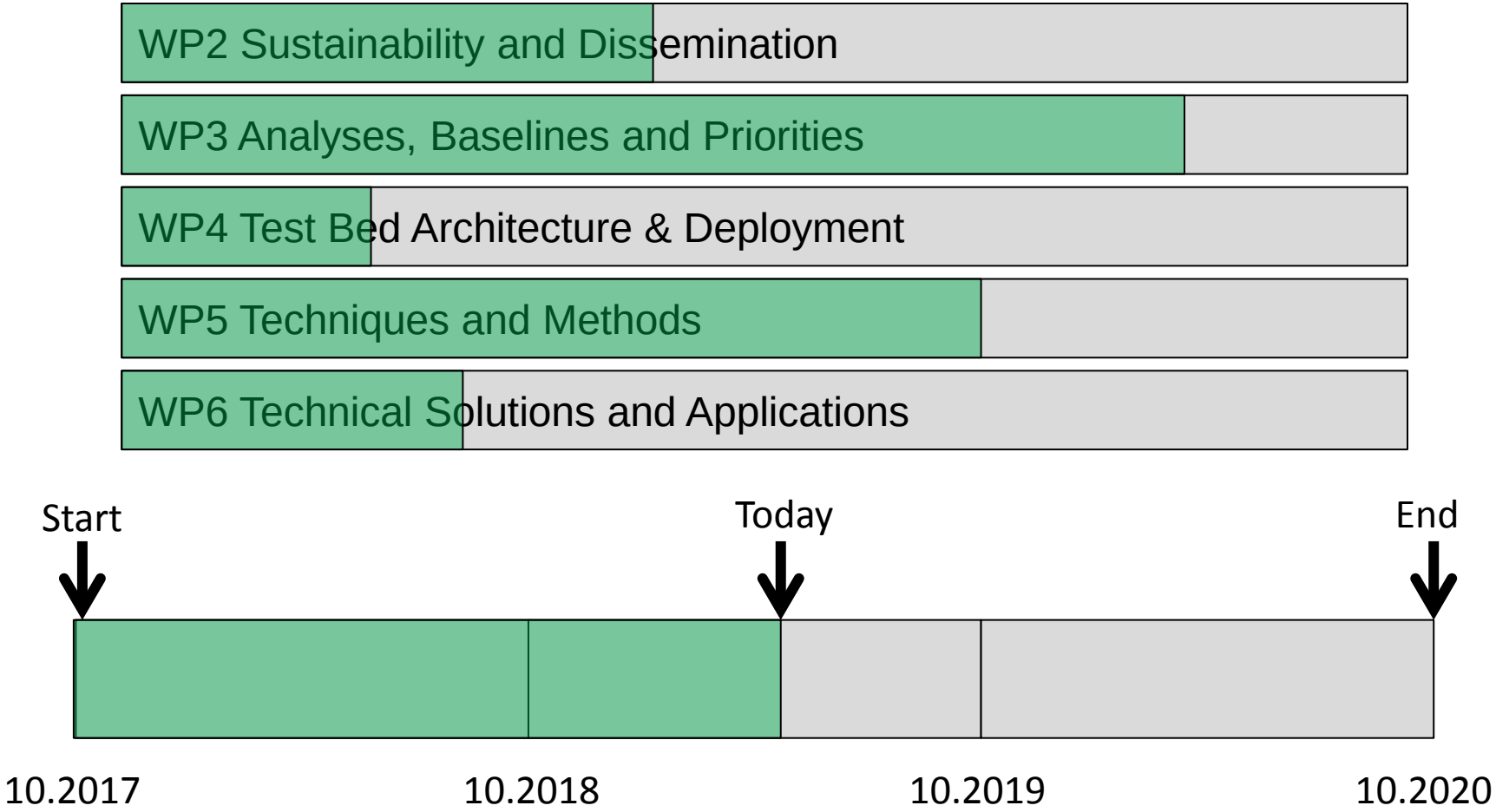

First project report available

“Baseline and Priorities”

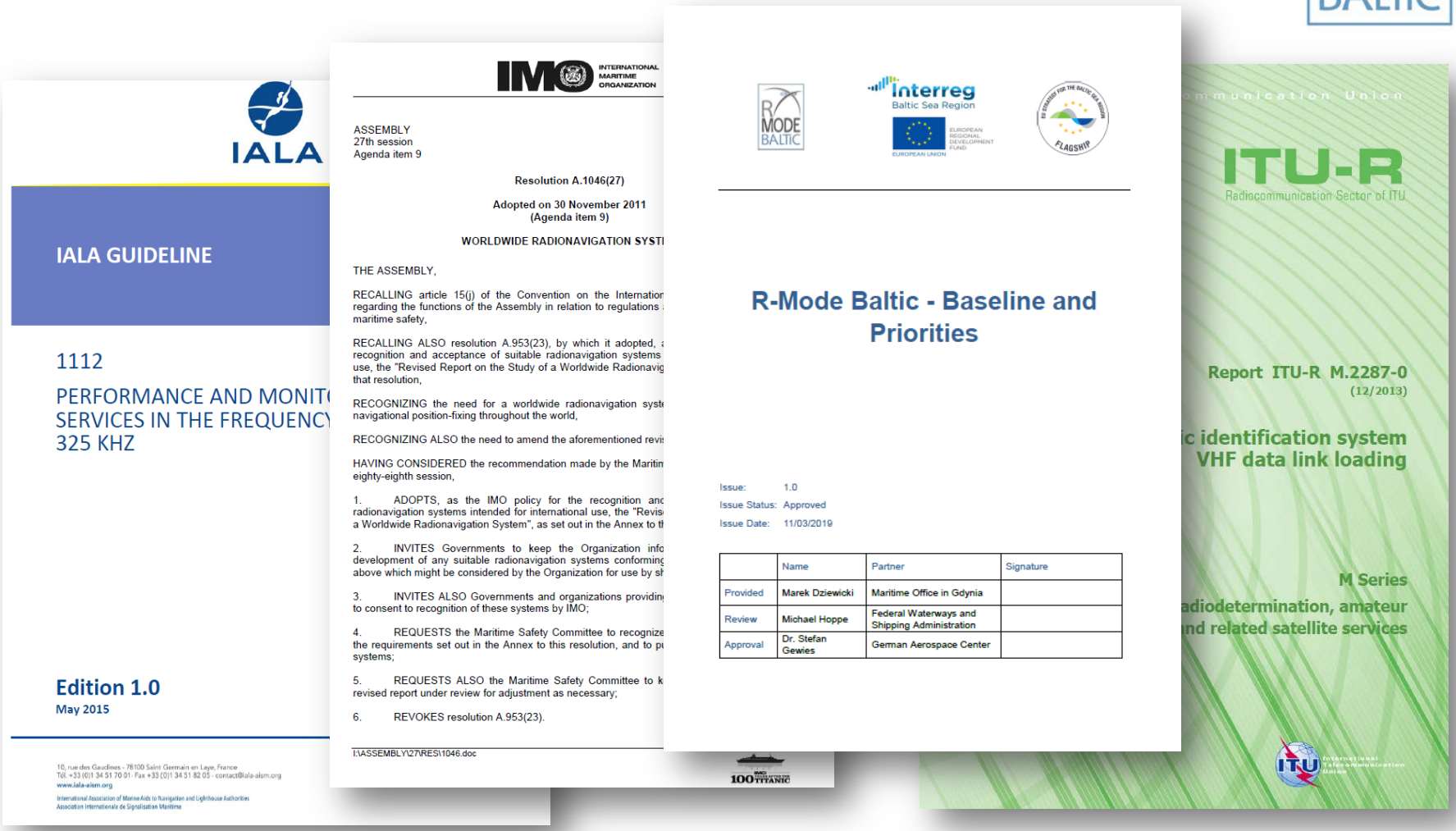

IALA

IALA GUIDELINE

1112

PERFORMANCE AND MONIT
SERVICES IN THE FREQUENCY
325 KHZ

Edition 1.0
May 2015

10, rue des Gaudines - 78100 Saint Germain en Laye, France
Tél. +33 (0)1 34 51 70 01 - Fax +33 (0)1 34 51 82 05 - contact@iala-aism.org
www.iala-aism.org
International Association of Marine Aids to Navigation and Lighthouse Authorities
Association Internationale de Signalisation Maritime

IMO INTERNATIONAL MARITIME ORGANIZATION

ASSEMBLY
27th session
Agenda item 9

Resolution A.1046(27)

Adopted on 30 November 2011
(Agenda item 9)

WORLDWIDE RADIONAVIGATION SYST

THE ASSEMBLY,

RECALLING article 15(j) of the Convention on the Internatio regarding the functions of the Assembly in relation to regulations maritime safety,

RECALLING ALSO resolution A.953(23), by which it adopted, recognition and acceptance of suitable radionavigation systems use, the "Revised Report on the Study of a Worldwide Radionavig that resolution,

RECOGNIZING the need for a worldwide radionavigation syst navigational position-fixing throughout the world,

RECOGNIZING ALSO the need to amend the aforementioned revis

HAVING CONSIDERED the recommendation made by the Maritin eighty-eighth session,

1. ADOPTS, as the IMO policy for the recognition anc radionavigation systems intended for international use, the "Revis a Worldwide Radionavigation System", as set out in the Annex to th

2. INVITES Governments to keep the Organization info development of any suitable radionavigation systems conforming above which might be considered by the Organization for use by sh

3. INVITES ALSO Governments and organizations providin to consent to recognition of these systems by IMO;

4. REQUESTS the Maritime Safety Committee to recognize the requirements set out in the Annex to this resolution, and to pu systems;

5. REQUESTS ALSO the Maritime Safety Committee to k revised report under review for adjustment as necessary;

6. REVOKES resolution A.953(23).

I:\ASSEMBLY\27\RES\1046.doc

Interreg Baltic Sea Region
EUROPEAN UNION
EUROPEAN REGIONAL DEVELOPMENT FUND
FLAGSHIP

R-Mode Baltic - Baseline and Priorities

Issue: 1.0
Issue Status: Approved
Issue Date: 11/03/2019

	Name	Partner	Signature
Provided	Marek Dziewicki	Maritime Office in Gdynia	
Review	Michael Hoppe	Federal Waterways and Shipping Administration	
Approval	Dr. Stefan Gewies	German Aerospace Center	

ITU-R
Radiocommunication Sector of ITU

Report ITU-R M.2287-0
(12/2013)

c identification system
VHF data link loading

M Series
adiodetermination, amateur
nd related satellite services

Compatibility tests of maritime radio beacons

Simplified MF transmitter chain

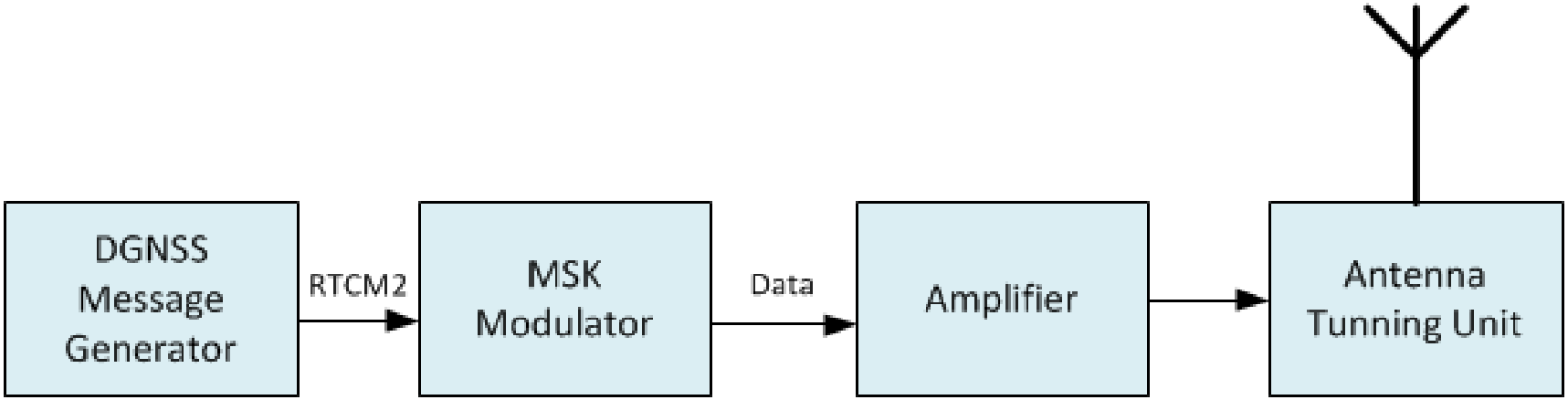

Compatibility tests of maritime radio beacons

Simplified MF R-Mode transmitter chain

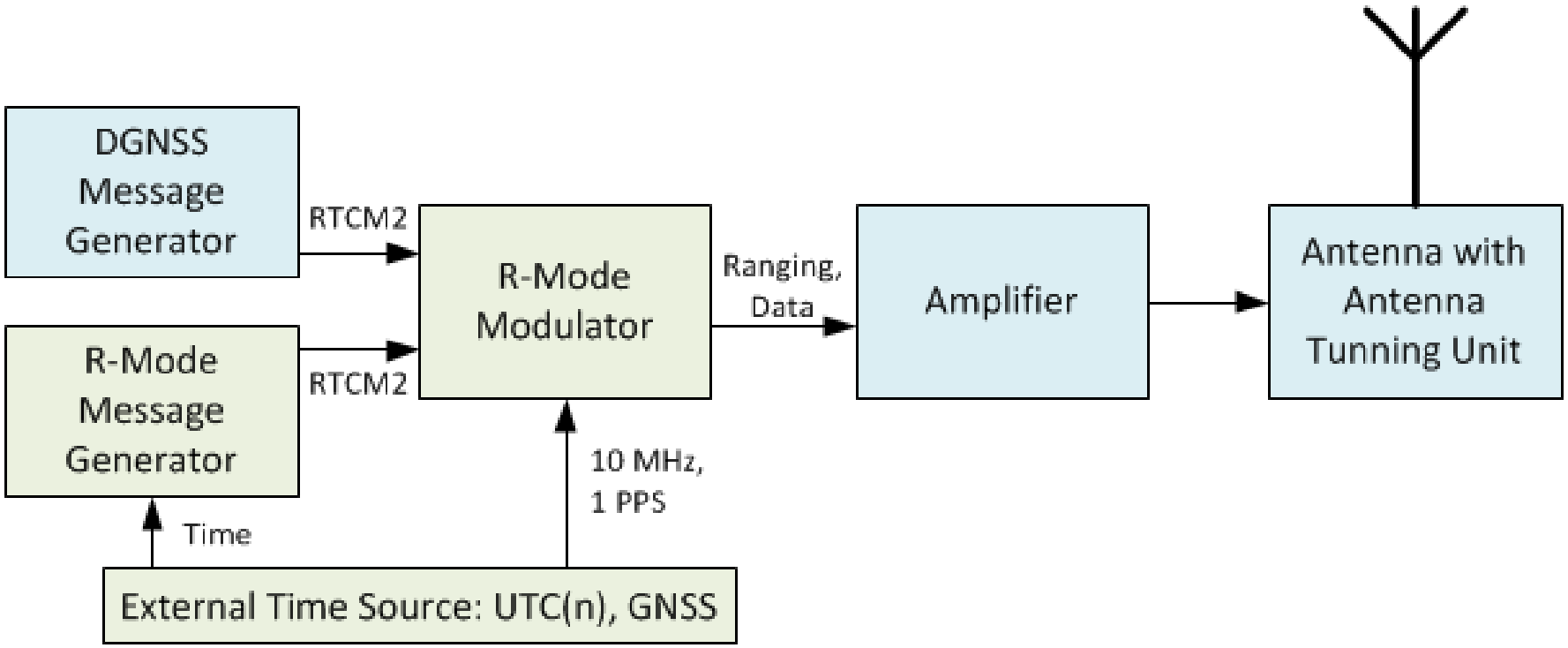

Compatibility tests of maritime radio beacon finished

Transmission of R-Mode signals

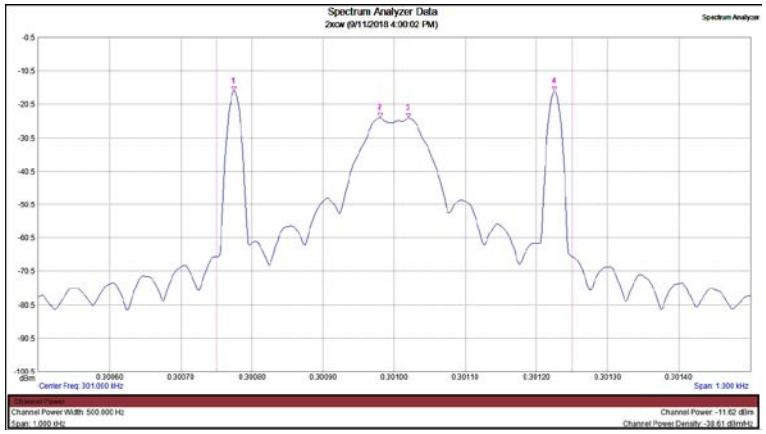

- Clean transmitted R-Mode signal from
  - German
  - Swedish
  - Danish

  radio beacons

➢Replace only modulator

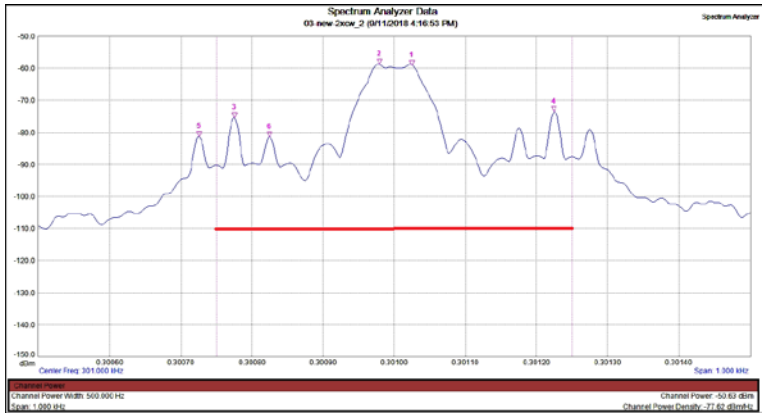

- Signal with intermodulations transmitted from Polish radio beacons

➢Replacement of modulator and amplifier necessary

Characterization radio beacon amplifier

Equipment

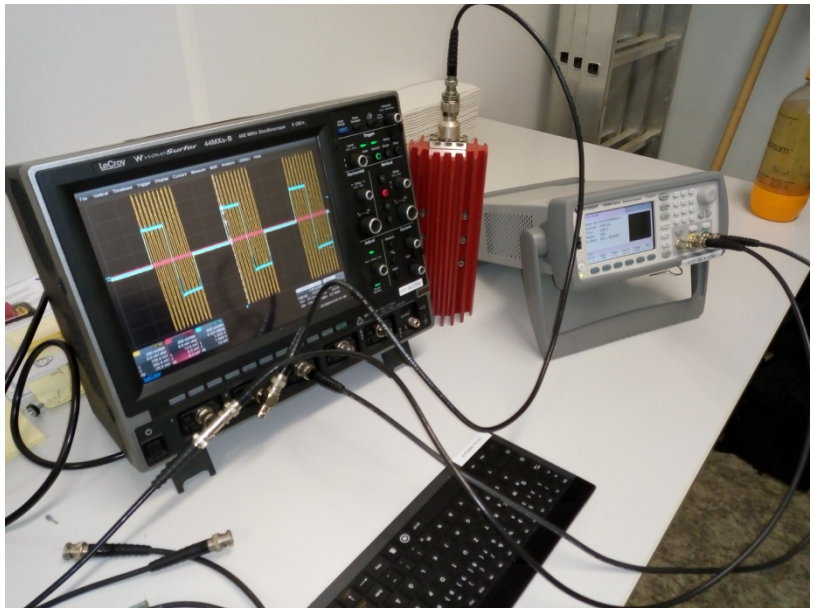

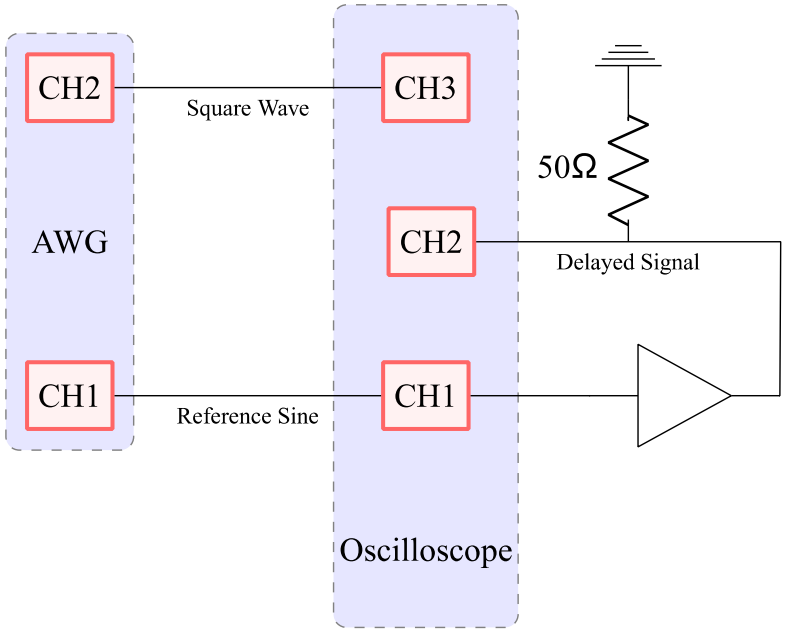

- Arbitrary Wave Generator
- Oscilloscope

Characterization amplifier

Results

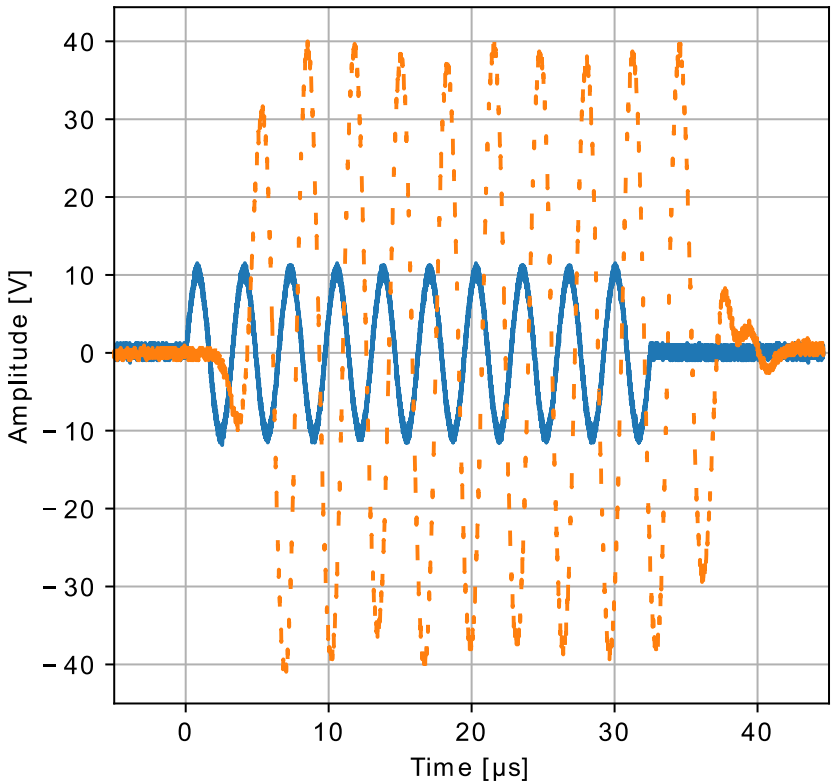

- 4.5µs delay in band
- Ambiguous signal
- Accuracy depending on signal form
- Accuracy up to 3ns with CW

➢ Further investigations with received signals over the air are necessary

Plan for R-Mode implementation on radio beacons

- Procurement of MF station upgrade (Germany and Sweden) ongoing
- Signals available in Baltic Sea at the end of summer 2019
- First measurements on sea at the end of 2019

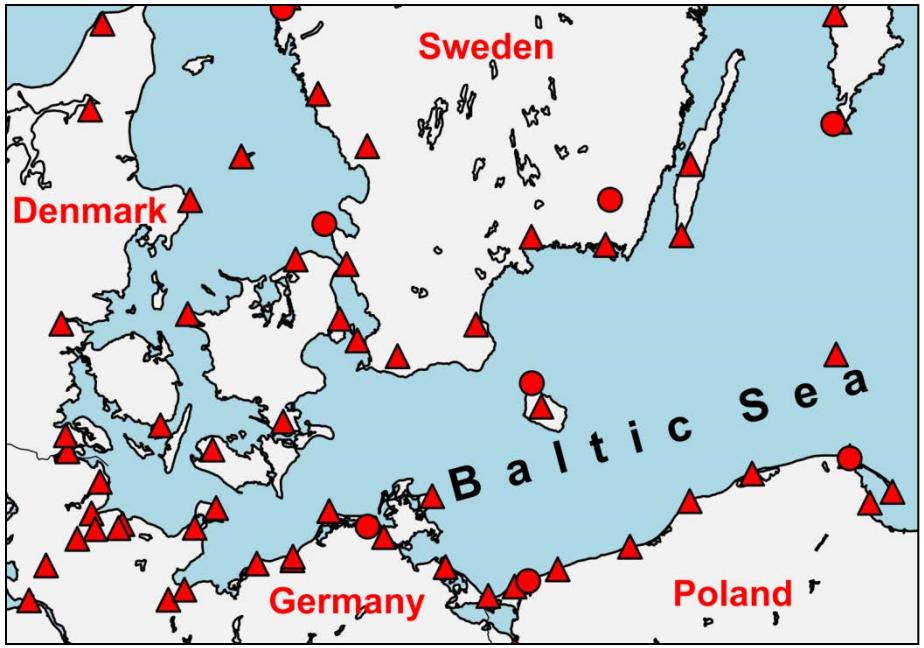

Possible R-Mode transmitter sites

- ● Maritime radio beacon (MF)
- ▲ AIS base station (VHF)

MF prediction based on propagation and interference models (GLA)

Estimated position accuracy based on coverage and HDOP predictions for the Baltic Sea

Day-time hours, 95% accuracy [m]

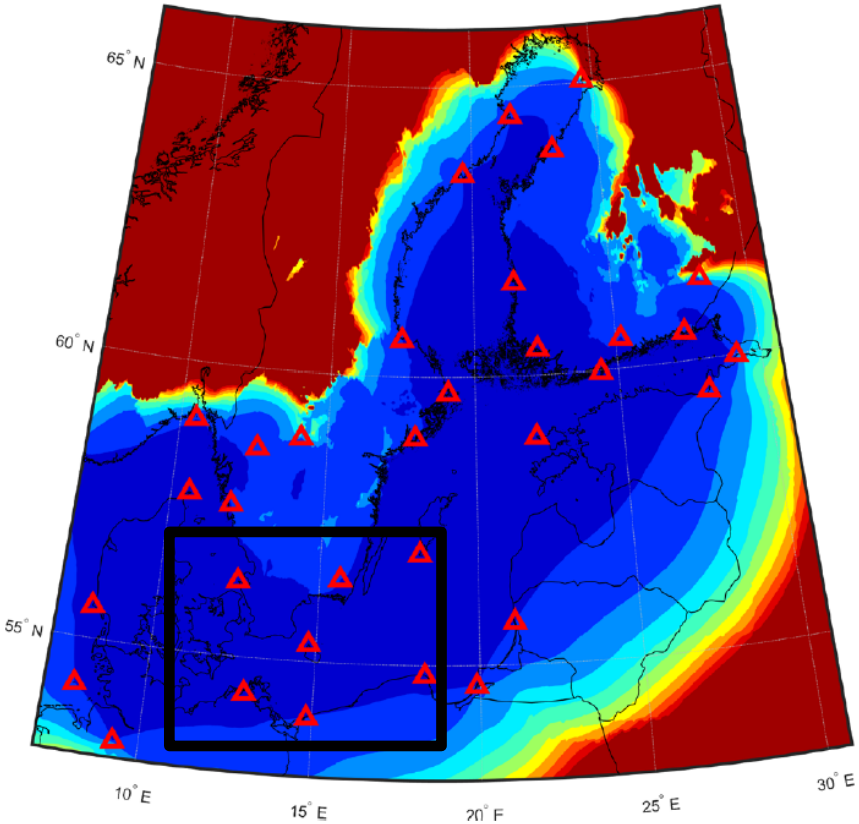

Night-time hours, 95% accuracy [m]

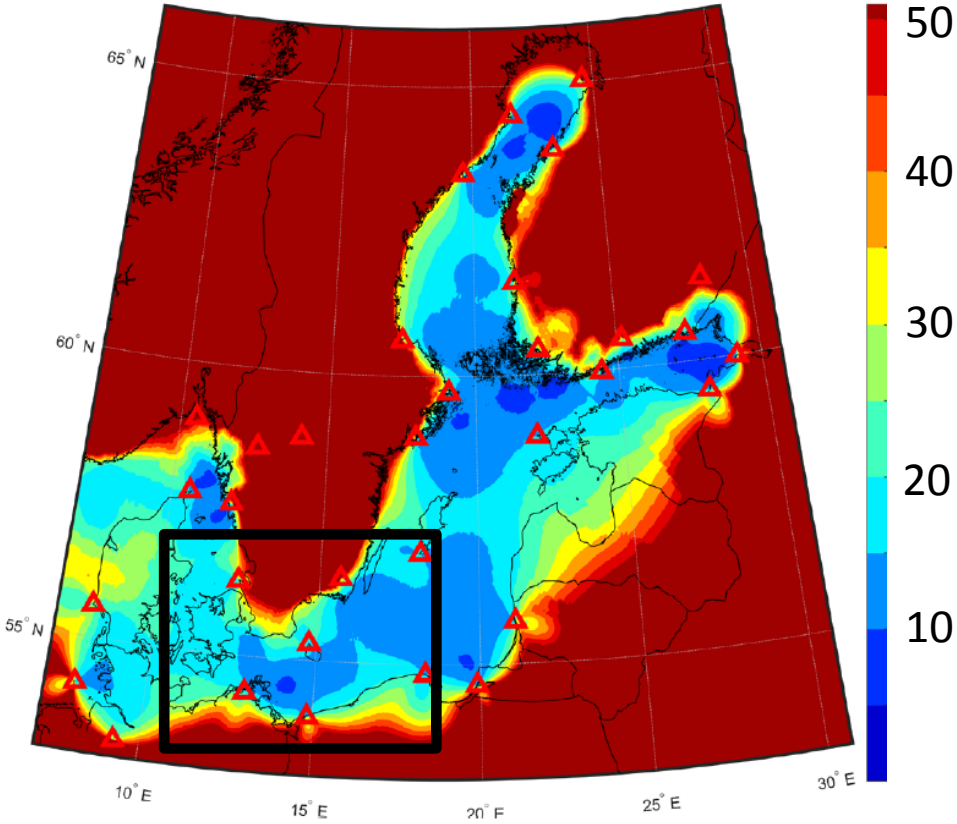

Roadmap for VDES R-Mode in 2019

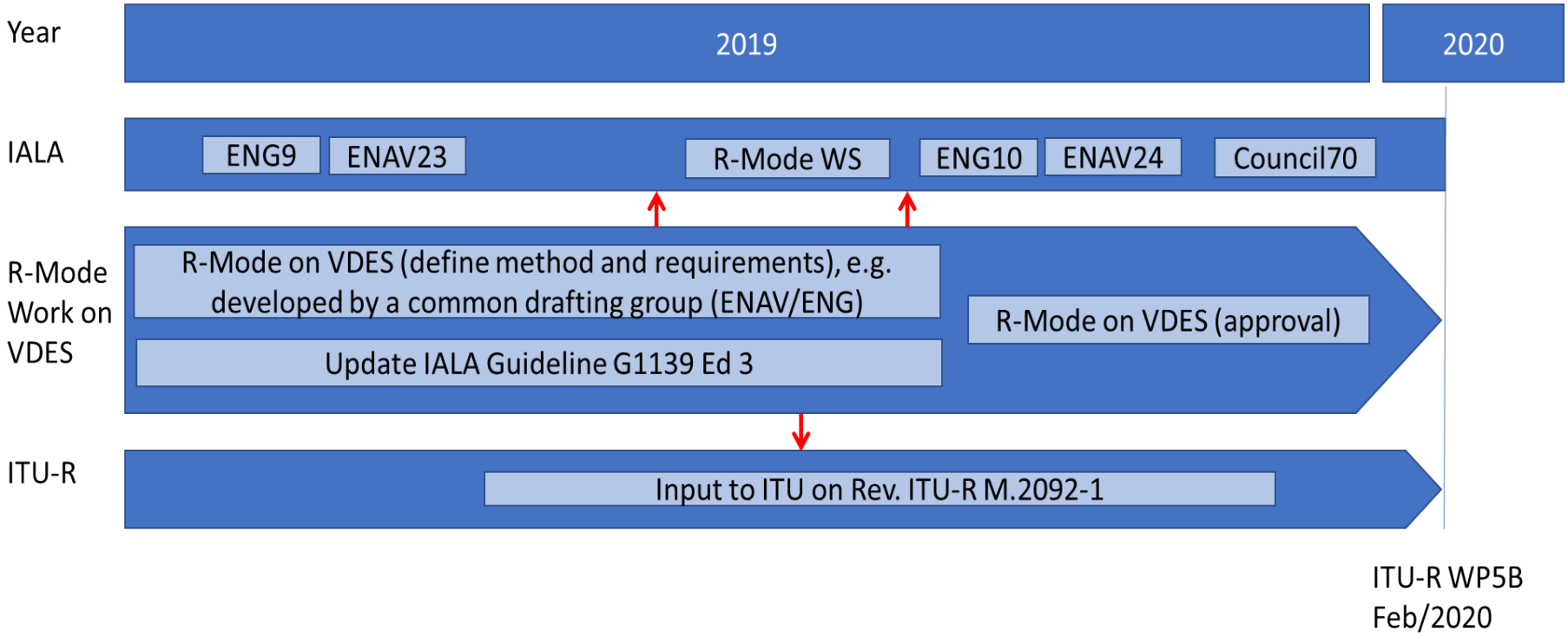

Announcement
IALA Workshop on Ranging Mode

When: 9th – 12th September 2019

Where: IALA Headquarter, Saint Germain en Laye, France

Topics:

- **Overview about recent world-wide R-Mode activities**
- **Implementation aspects of R-Mode on AIS/VDES**
- **Implementation aspects of R-Mode on MF radio beacons**
- **The way forward: R-Mode roadmap**

Contact: S. Gewies (Stefan.Gewies@dlr.de) or M. Hoppe (Michael.Hoppe@wsv.bund.de)

What happens with the testbed after 2020?

- Announcement of 9 month extension for Interreg BSR Projects of 2nd call is possible

- Beginning discussions with BSR maritime administrations for extension of testbed

Contact

Stefan Gewies
Project Manager
German Aerospace Center (DLR)
Institute of Communications and Navigation
Phone: +49 3981 480187
E-mail: Stefan.Gewies@dlr.de
www.r-mode-baltic.eu

Project partner